Model 2BA-AL & 2BC-AL

Double Banana Plug to Alligator Clip Breakouts Cable Assembly

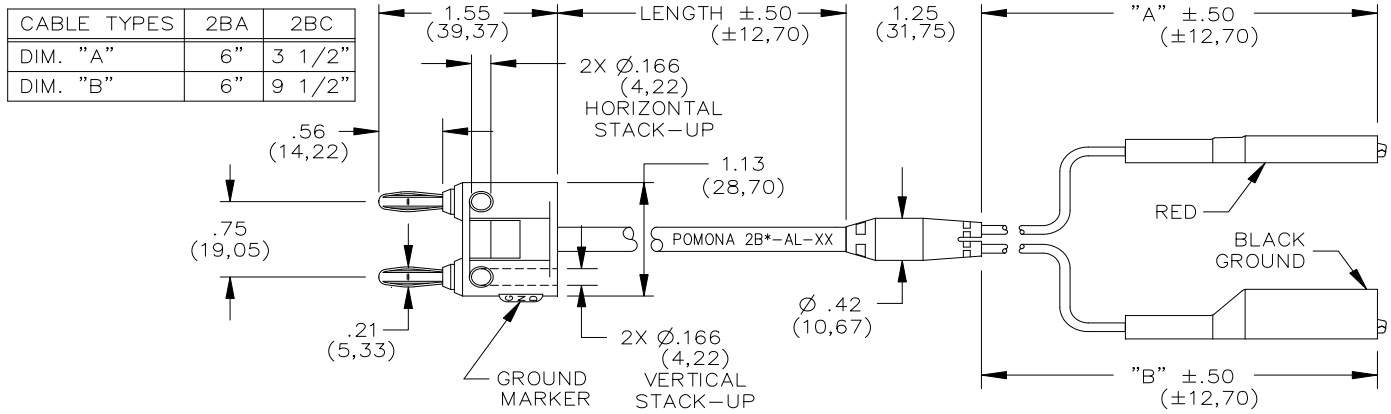

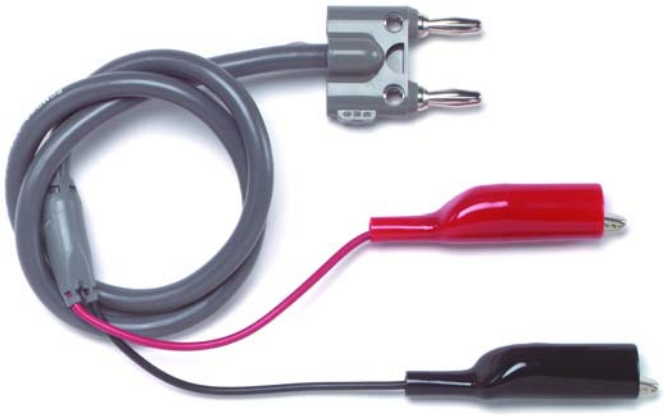

Model 2BA-AL
Double Banana Plug to Alligator Clip
Breakouts Cable Assembly

(Model 2BC-AL: Double Banana Plug, Cable, and Molded Breakout is in Black)

Materials

Double Banana Plug:
- *Plug Bodies*: Brass, Nickel Plated
- *Springs*: Beryllium Copper, Nickel Plated
- *Insulation*: Polypropylene molded to the plug bodies and cable. Color matches color of cable.

Marking: POMONA ELECTRONICS CO., INC. POMONA CALIFORNIA

Cable:
- *2BA*: 2 Cond. Twisted Pair, 18 AWG, 65 x 36 t.c., .250 (6.4) O.D., Marking: POMONA 2BA-AL-XX, Color: Gray.
- *2BC*: RG-58C/U, .195 (5.0) O.D., Marking: POMONA 2BC-AL-XX, Color: Black.

Molded Breakout: PVC Insulated molded to breakout leads and cable. Color matches color of cable.

Breakout Leads: 20 AWG, 41 x 36 t.c., PVC Insulated, .087 (2.21) O.D., Color matches color of insulator.

Insulated Alligator Clips:
- *Body*: Steel, Nickel Plated
- *Insulator*: Vinyl. Color: One Black and One Red.

Ratings

Operating Voltage:
- Maximum voltage for *hands free use*: 150 Vrms
- For *CE Compliance* and for personal safety, do not hold in hand when voltages exceed 33 Vrms/70 Vdc. Do no use on circuits where transient stresses can exceed the rated voltage.

Operating Temperature: +122°F (+50°C) Max.
Current: 5 Amperes

Ordering Information

Model 2B*-AL-XX
* = Cable Type: 2BA: 2 Cond. Twisted Pair
2BC: RG58C/U
XX = Cable Lengths
- 2BA: Std. Lengths: 36" (91.44cm), 48" (121.92cm)
- 2BC: Std. Lengths: 36" (91.44cm), 60" (152.4cm)

Ordering Example: 2BA-AL-48, cable is 2 Cond. Twisted Pair in 48" length.
Additional lengths can be quoted upon request.

All dimensions are in inches. Tolerances (except noted): .xx = ±.02" (,51 mm), .xxx = ± .005" (,127 mm). All specifications are to the latest revisions. Specifications are subject to change without notice. Registered trademarks are the property of their respective companies.

Copyright © 2009 D1094040 Rev. 101